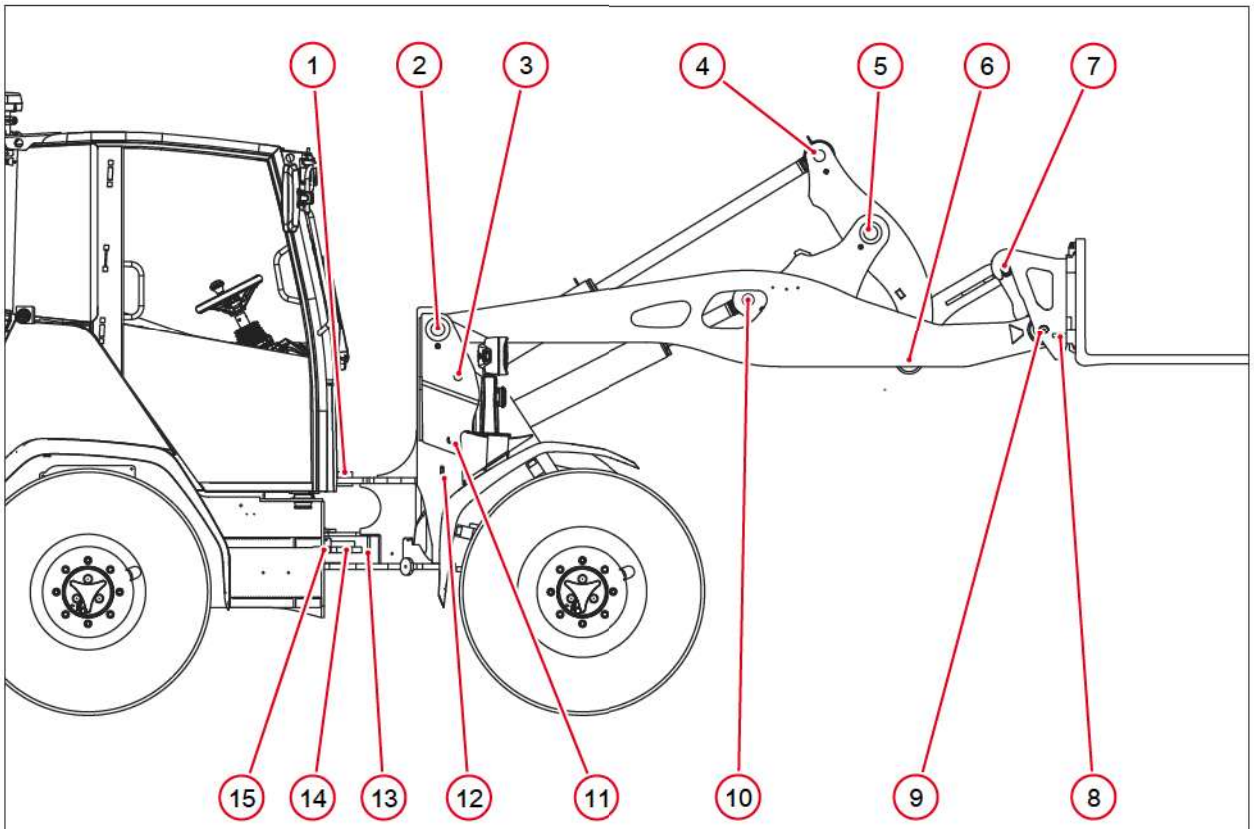

Fig. 215: Lubrication plan

Lubrication point and number [x]		
1	Bearing of the central joint at the top front	[1]
2	Bearing of loader unit	[2]
3	Bearing of tilt cylinder rear	[1]
4	Bearing of tilt cylinder front	[1]
5	Bearing of large return lever	[1]
6	Bearing of drawbar rear	[1]
7	Bearing of drawbar front	[2]
8	Bolt of hydraulic lock bolt for attachments	[2]
9	Pivot point of quickhitch	[2]
10	Bearing of lifting cylinder front	[2]
11	Bearing of lift cylinder rear	[2]
12	Front steering cylinder bearing (remote lubrication	[1]
13	Bearing of steering cylinder rear	[1]
14	Bearing of the central joint bottom	[1]
15	Bearing of the central joint at the top rear (remote lubrication)	[1]

8.6.2 Central lubrication system

The central lubrication system automatically lubricates the vehicle's lubrication points periodically. The integrated electronic control unit has a data memory. for saving the times that have been set or that have elapsed.